Clean Energy Systems Integration Lab

Washington State University

Oxy-FC Concept

Dustin McLarty

Assistant Professor

School of Mechanical and Materials Engineering

Introduction

Electrochemistry is fundamentally different from combustion.

What if we treated fuel cells differently from a heat engines?

What if carbon-capture was an integral part of a power cycle?

Oxy-FC is a novel system integration with the potential for combined (i.e. power + H_2) efficiency greater than 80% (LHV) including the cost of carbon capture and liquefaction

© Dr. Dustin McLarty, 2015

Overview

- » What is Oxy-SOFC?
  - > Pressurized SOFC polygeneration with pure O_2 cathode
- » What are the benefits of Oxy-FC?
  - > Higher FC operating voltage
  - > Nearly 100% H_2 recovery
  - > No high temperature air heat exchangers
  - > Integrated carbon capture & liquefaction
- » What needs to occur for Oxy-FC to happen?
  - > Validation of commercial SOFC cells at high pressure with pure O_2
  - > Internal temperature control development & validation
  - > Purge cycle validation
- » What else can Oxy-SOFC do?
  - > Food/Energy nexus: efficient (carbon neutral) ammonia production
  - > De-coupled FC-GT: Highly efficient parallel stream power generation
- » A vision for Oxy-SOFC development:
  - > Phase 1: lab bench validation up to 1kW
  - > Phase 2: Module development (500kW) & system integration
  - > Phase 3: Scale up and demonstration

© Dr. Dustin McLarty, 2015

Oxy-SOFC concept

Differences from standard SOFC:

- Pressurized, pure O_2 cathode increases FC efficiency
- Higher anode H_2 concentration increases FC efficiency
- Waste heat captured in chemical potential of H_2
- Cryogenic air separation synergistically produces O_2 for FC and liquid N_2 for the carbon liquefaction and H_2 recovery

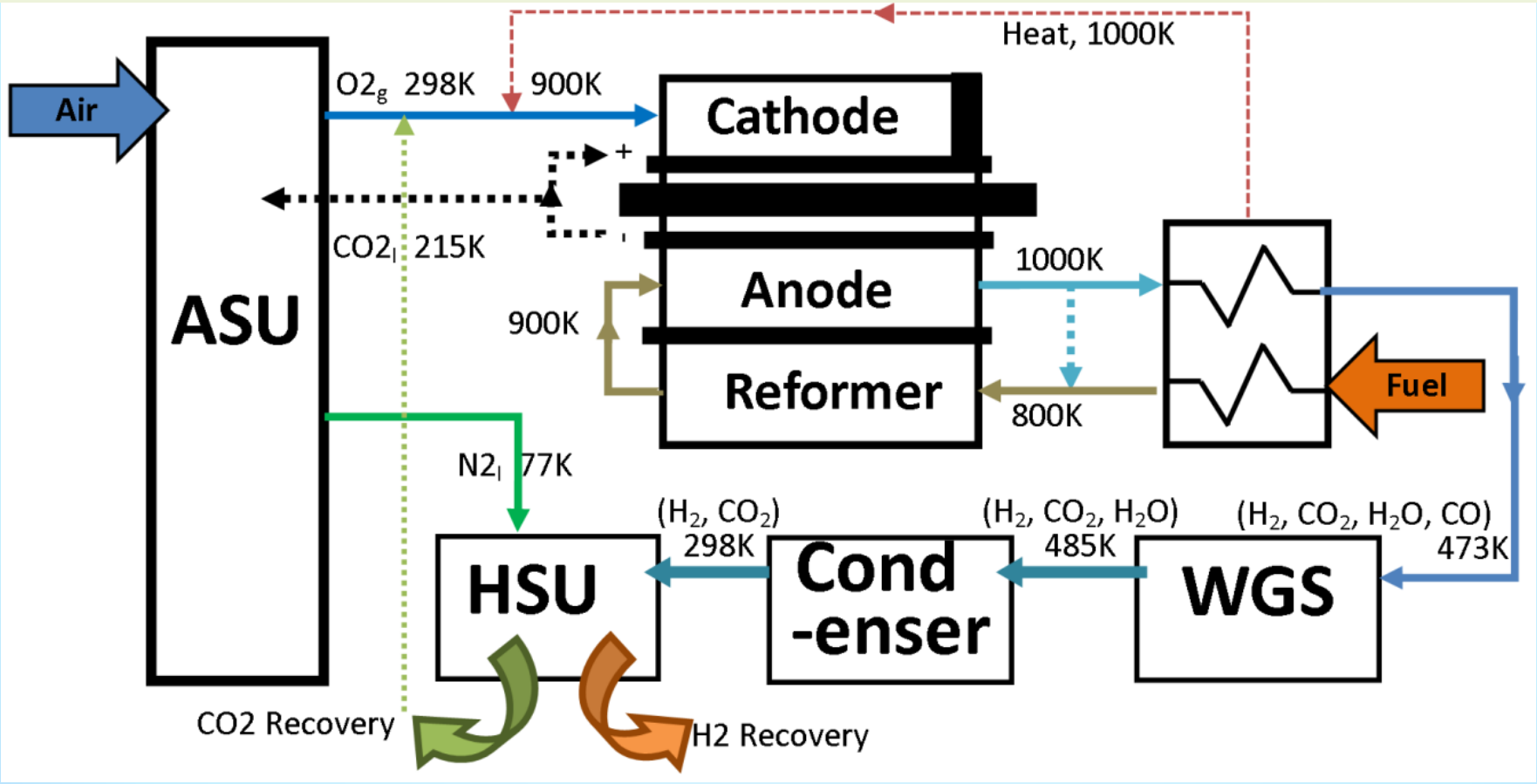

McLarty, D., and J. Brouwer. "Poly-generating closed cathode fuel cell with carbon capture." Applied Energy, 131, 108-116

© Dr. Dustin McLarty, 2015

Migrating from baseline

Performance differences from standard SOFC:

This chart details the voltage & power improvement to a SOFC meeting SECA target performance from a) pure O_2 cathode, b) pressurization to 10 atm, c) higher anode H_2 concentration

Variable	SECA	Pure O_2	Pure O_2 @10atm	Reform Cooling	Reform Cooling @10atm	Anode Re-circulation	Anode Recirculation @ 10atm	Higher Power @10atm
Power ($mW \cdot cm^{-2}$)	500	500	500	500	500	500	500	750
Voltage	0.70	0.817	0.956	0.829	0.954	0.826	0.943	0.9018
Utilization	80%	80%	80%	63.9%	85.3%	70.0%	89.6%	80%
Single Pass Utilization	80%	80%	80%	63.9%	85.3%	39.7%	79.3%	61.11%
Current ($A \cdot cm^{-2}$)	0.715	0.612	0.523	0.603	.524	0.606	0.530	0.8317
Oxygen ($kg_{O2} \cdot kWh^{-1}$)	0.427	0.365	0.312	0.360	0.312	0.362	0.316	0.331

Thermally unbalanced

Requires steam production

Recirculation provides steam

© Dr. Dustin McLarty, 2015

Energy Balance

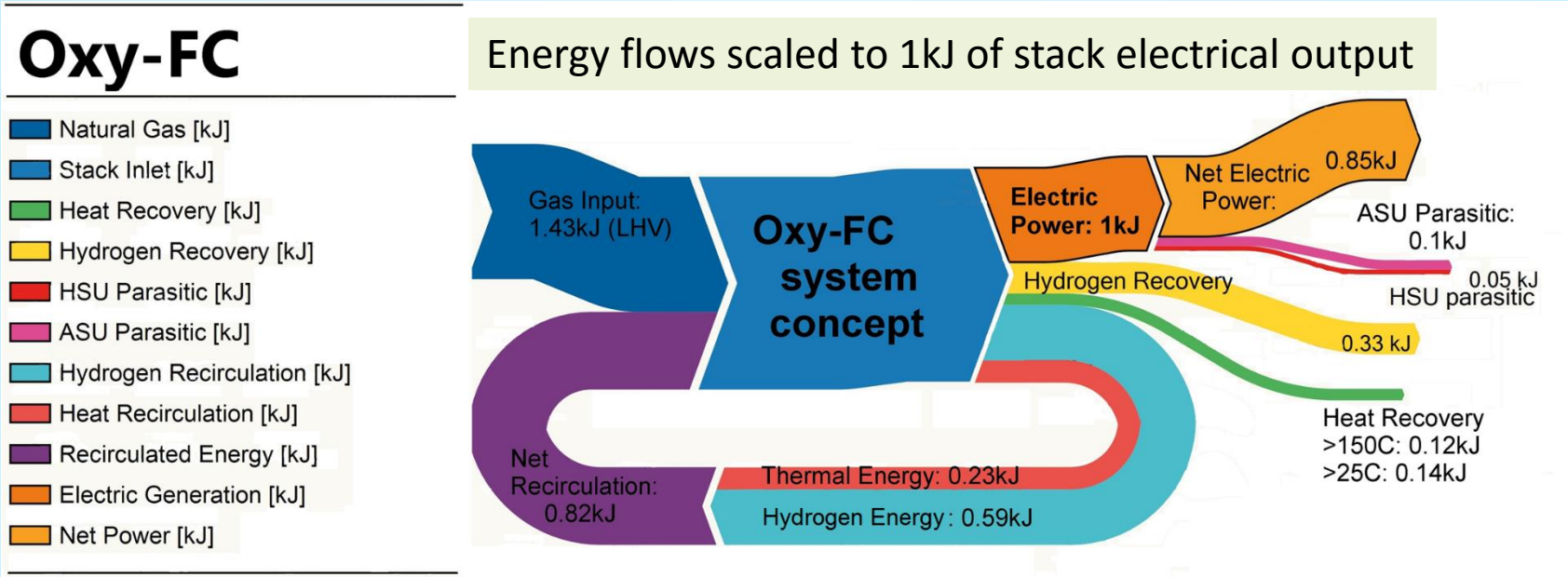

Energy outputs and parasitics for Oxy-FC at 10atm & 750mW·cm^{-2}

Energy Flow	% of Fuel Input Energy
Electrical Output	69.83
H_2 Recovery	23.12
HSU Parasitic (condensing H_2O)	-1.1
ASU Parasitic	-7 to -21 depending on scale of ASU
Net Efficiency (LHV)	84.9 (@500MW) to 70.9 (@1MW)

© Dr. Dustin McLarty, 2015

ASU Parasitic

How big is the penalty for producing O_2?

This chart illustrates the energy penalty of producing the oxygen

Oxygen production is more efficient at large scale (*note log-axis of size)

At 1 MW, the penalty is ~21%, but above 50MW the penalty is <10%

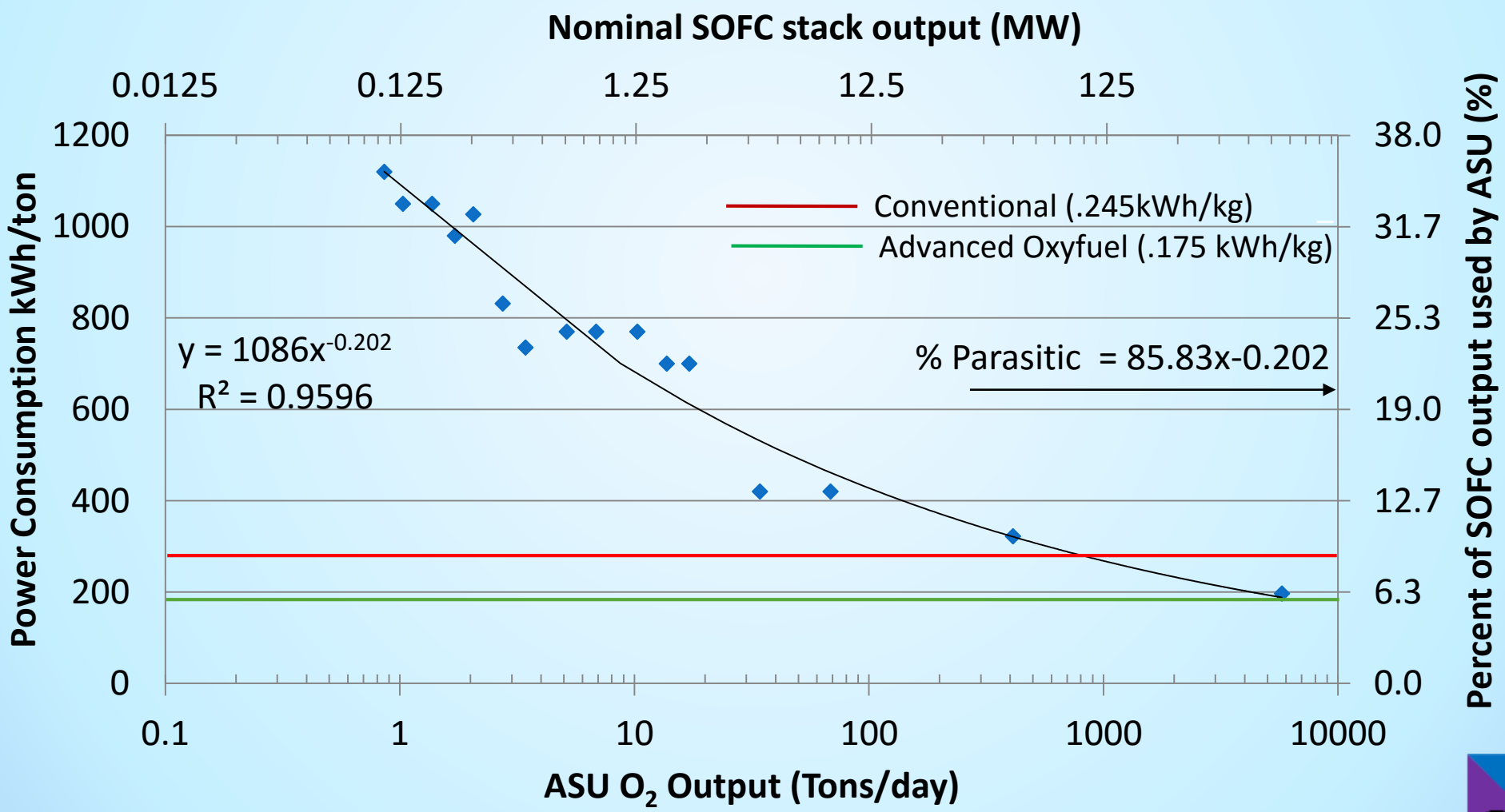

© Dr. Dustin McLarty, 2015

Cost of Electricity Estimation

Oxy-FC competes with $0.07/kW electricity at a scale of 10MW with co-production of H_2 at $2/kg

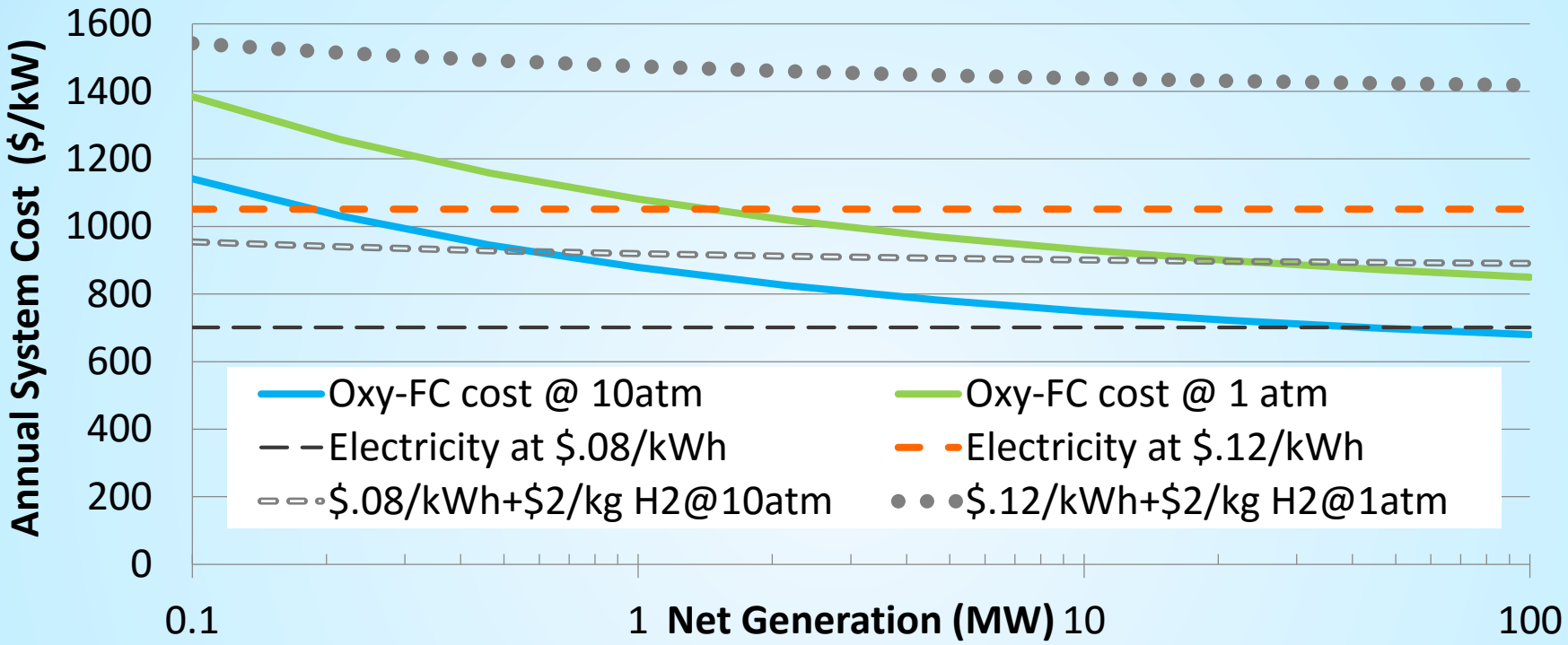

Assumptions:

- Only the electricity and hydrogen considered
- Hydrogen production is valued at $2 per kg (consistent with U.S. DOE production cost targets)
- ASU parasitic scales with system capacity (see previous slide)
- SOFC system cost assumed to be $3000/kW
- The ASU cost scaled to a current 40 ton/day system with an installed cost of $10M
- Capital financing is assumed to be 4% over the lifetime of the system, 20 years
- Natural gas is assumed to be $4 per mmBTU for an industrial customer
- Annual operations and maintenance costs are assumed to be a fixed value of $200 per kW of installed electric capacity

© Dr. Dustin McLarty, 2015

Temperature Control Challenges

Without a pass through cathode flow, controlling temperature is more complicated.
The anode gas flow must control both temperature and power.
A novel controller has been hypothesized and tested on simulated Oxy-FC using current and fuel flow to control power, voltage and temperature while maintaining electrochemical stability

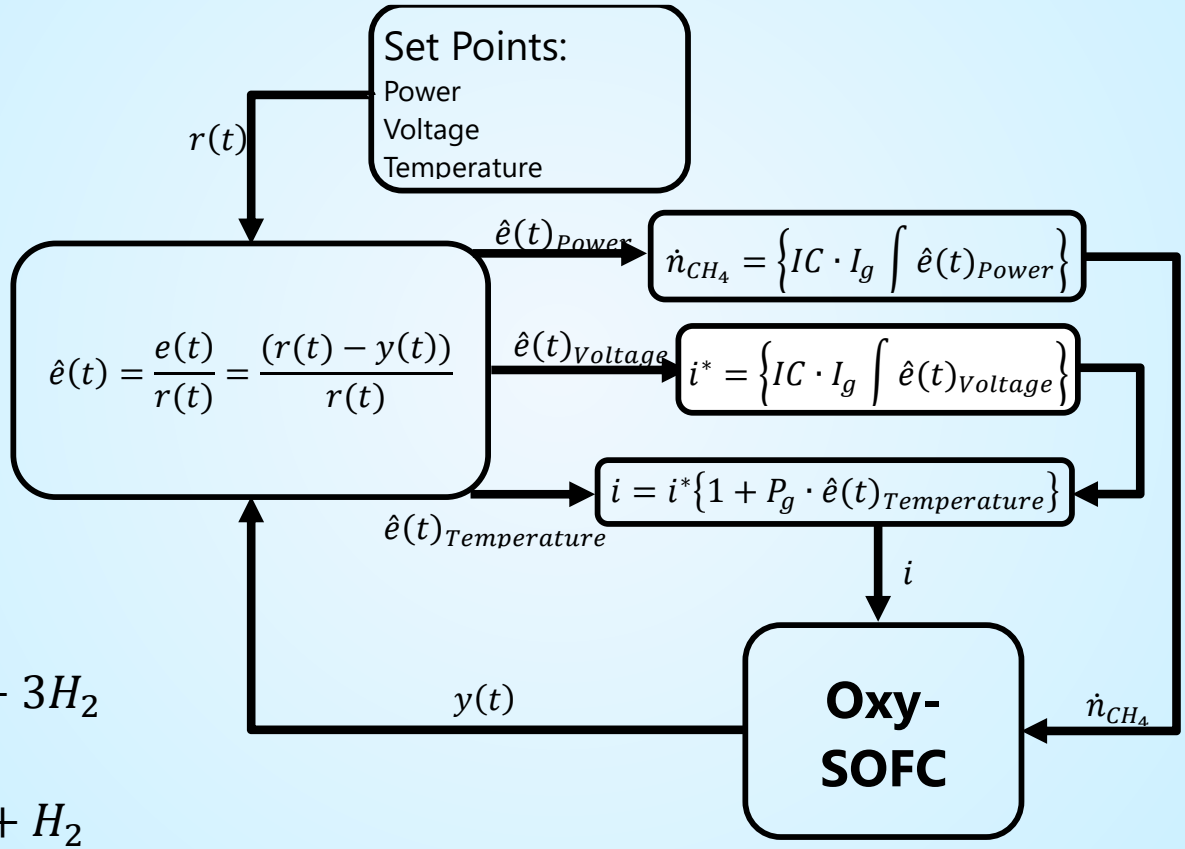

$$CH_4 + H_2O \xrightarrow{R_{rf}} CO + 3H_2$$

$$CO + H_2O \xrightarrow{R_{sf}} CO_2 + H_2$$

$$V \cdot i = \frac{i}{2F} \cdot h_{rxn1} - \left(\dot{n}c_p\Delta T\right)_{Anode} - \frac{i \cdot \dot{n}_{CH_4}}{i^* \cdot Cells} \cdot (h_{rxn2} + h_{rxn3})$$

© Dr. Dustin McLarty, 2015

De-coupled FC– GT

New De-Coupled FC-GT

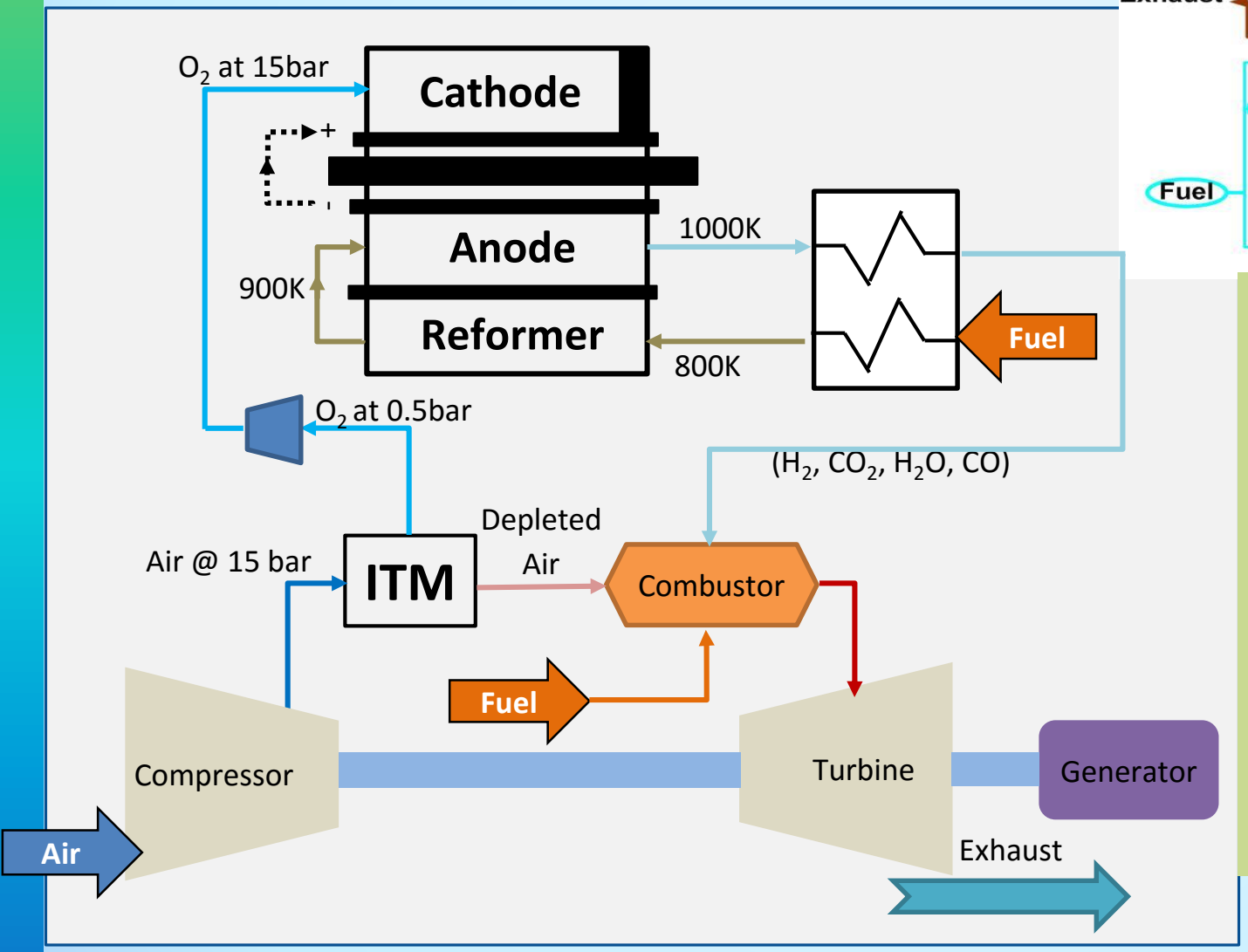

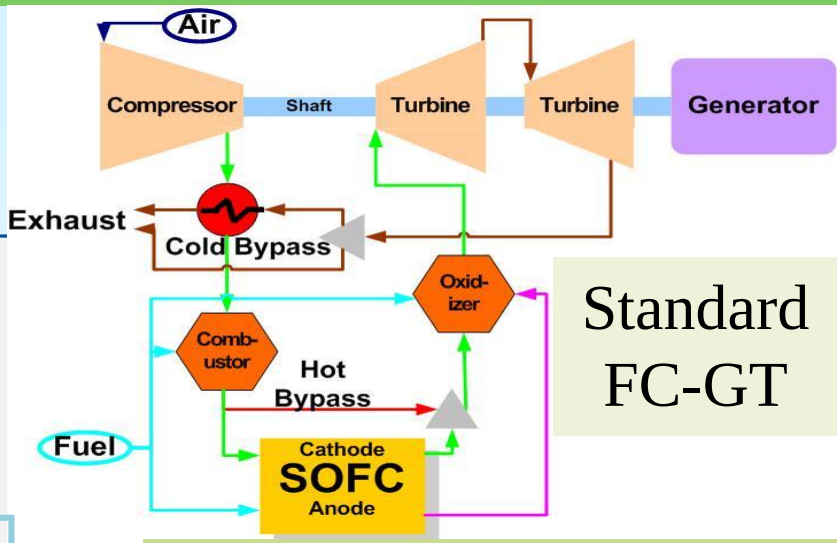

Standard FC-GT

Differences from standard FC-GT

- Potential for retrofit to existing systems
- Eliminates costly high temperature heat exchangers
- FC not directly in working flow risking surge/stall
- Independent control of GT flow and FC flow
- Higher efficiency operating condition for fuel cell
- Potential for low emission combustion

© Dr. Dustin McLarty, 2015

Ammonia Co-Production

Oxy-FC can provide ultra-efficient, carbon free, fertilizer production!

- The Oxy-FC concept is readily integrated with the standard Haber-Bosch process of ammonia synthesis by passing the exhaust N_2 and H_2 streams over a catalyst bed to form NH_3
- Ammonia production consumes 2% of the worlds fossil fuel at less than 50% thermal efficiency
- Eliminates steam reforming, partial oxidation, shift reactors, and gas refining from ammonia plant

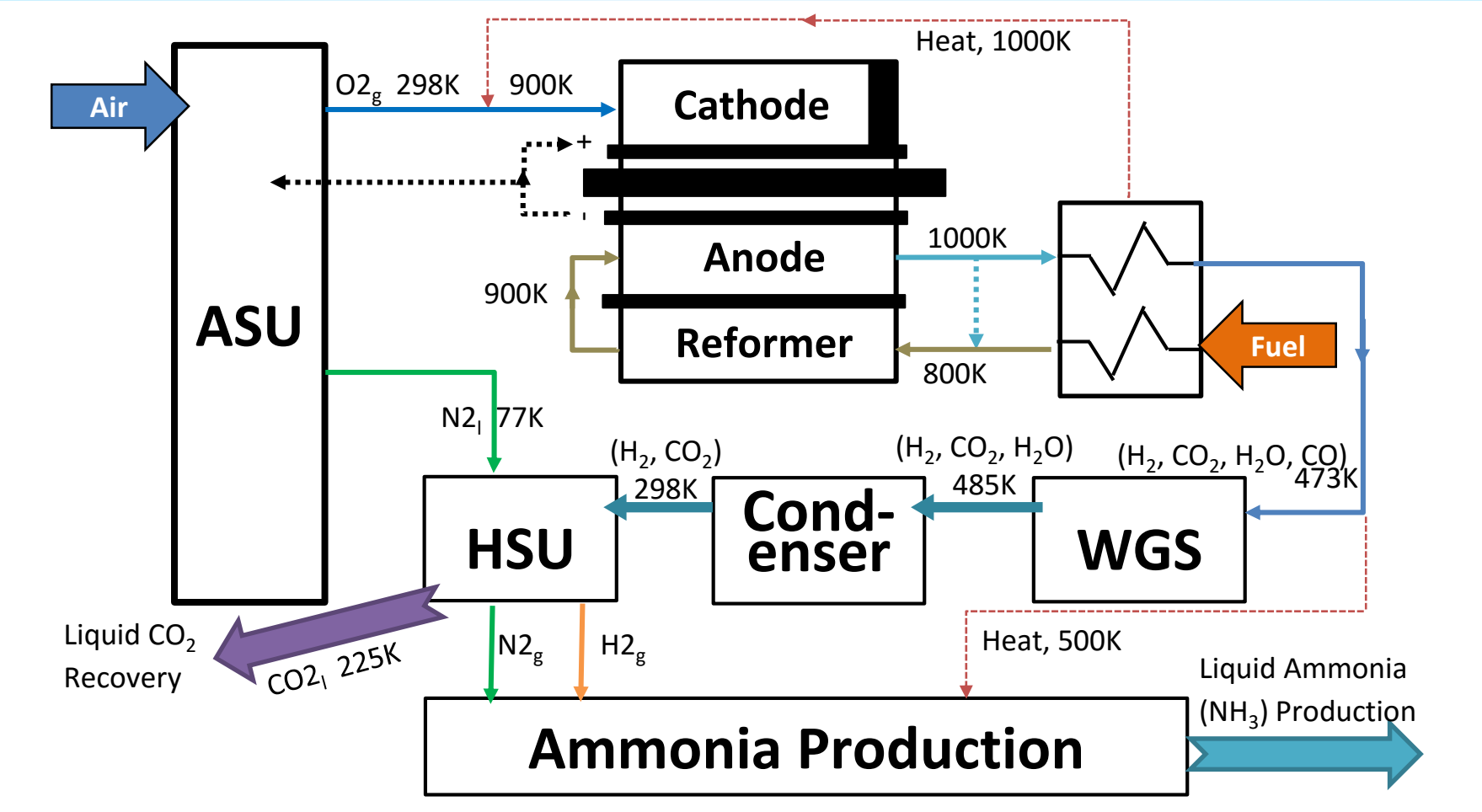

© Dr. Dustin McLarty, 2015

Oxy-SOFC Development Path

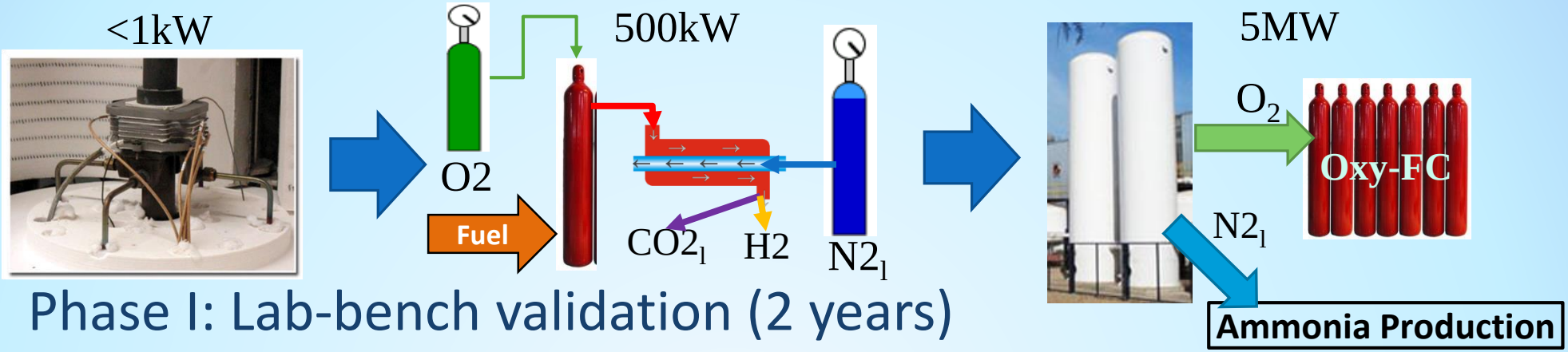

- » Phase I: Lab-bench validation (2 years)
  - > Single cell to short stacks ~1kW
  - > Performance validation with pressurization & pure O_2 cathode
  - > Oxygen contaminant sensitivity, purge tests
- » Phase II: Module development (2 years)
  - > Full stack testing (0.5-1MW)
  - > Thermal control validation
  - > Purge cycle validation
  - > CO_2 liquefaction & hydrogen recovery validation
- » Phase III: Demonstration scale (2 years)
  - > Installation at site with existing cryogenic air separation
  - > Test multiple modules comparing stacks from different manufactures
  - > Combine with ammonia synthesis

Year 1: Steady-state validation

Year 2: Dynamic performance characterization

© Dr. Dustin McLarty, 2015

Summary

- Oxy-FC completely rethinks how electrochemistry is incorporated in a cycle
  - No high temperature air heat exchangers
  - CO_2 separation and liquefaction incorporated in design
  - 100% H_2 recovery from anode stream
- Thermodynamic synergies between SOFC and cryogenic air separation increases net system efficiency:
  - Higher cathode O_2 concentration increases voltage
  - Cooling with fuel reforming increases anode H_2 concentration and voltage
  - Cathode flow at 4% of standard FC allows pressurization benefit to exceed work
- Oxy-FC can integrate with other energy systems
  - De-coupled FC-GT
  - Oxy-FC-Haber for co-production of ammonia
- Validation of the Oxy-FC concept is essential
  - Test facilities are under construction at WSU
  - Commercial manufacturer involvement is essential
  - Scale-up to established balance-of-plant components is long-term goal (>100MW)

© Dr. Dustin McLarty, 2015